46 Brampton Road
Eastbourne
BN22 9BN
01323 520295 | no-reply@ebca.co.uk

VEHICLE INSPECTION REPORT

YP68UHK

Ford Ranger Pick Up Double Cab Wildtrak 3.2 TDCi 200 Auto

nama GRADE 3

Inspection

Serious Damage?	No

Vehicle

VAT	Margin
V5	Present

Details

Reg. date	12/10/2018	**Body Style**	Pick-up	**Last service miles**	102,417
Year	2018	**Keys**	1	**MOT Due**	04/02/2027
Mileage	102,858 Miles Warranted	**Service history**	Yes	**Gearbox**	AUTOMATIC
Fuel Type	Diesel	**Service documents**	Service Book	**Gears**	6
Colour	ORANGE	**Number of stamps**	6		
VIN	6FPPXXMJ2PJP19918	**Last service date**	05/02/2026		

Last service 05/02/2026 at 102417 miles (6 services (3 main dealer).

Tyres

NSF	BRIDGESTONE	6.0mm
NSR	GOODYEAR	7.0mm
OSF	CONTINENTAL	5.0mm
OSR	GOODYEAR	7.0mm
Spare		

Features

- Bluetooth connection
- Navigation system
- Towbar
- Metallic Paint
- Partial leather seat trim
- Cruise control
- Park assist camera
- Air conditioning
- Drivers airbag
- Front parking sensor
- Rear parking sensor
- Front electric windows
- Passenger airbag
- Heated front seat
- Digital radio
- Rear electric windows
- Central locking

Photos

No phone connected, please use the touchscreen
Driver door open
P R N D S

17:18 51°
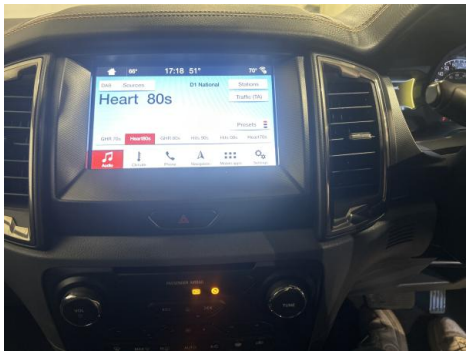
17:18 51°
Heart 80s

Condition Check

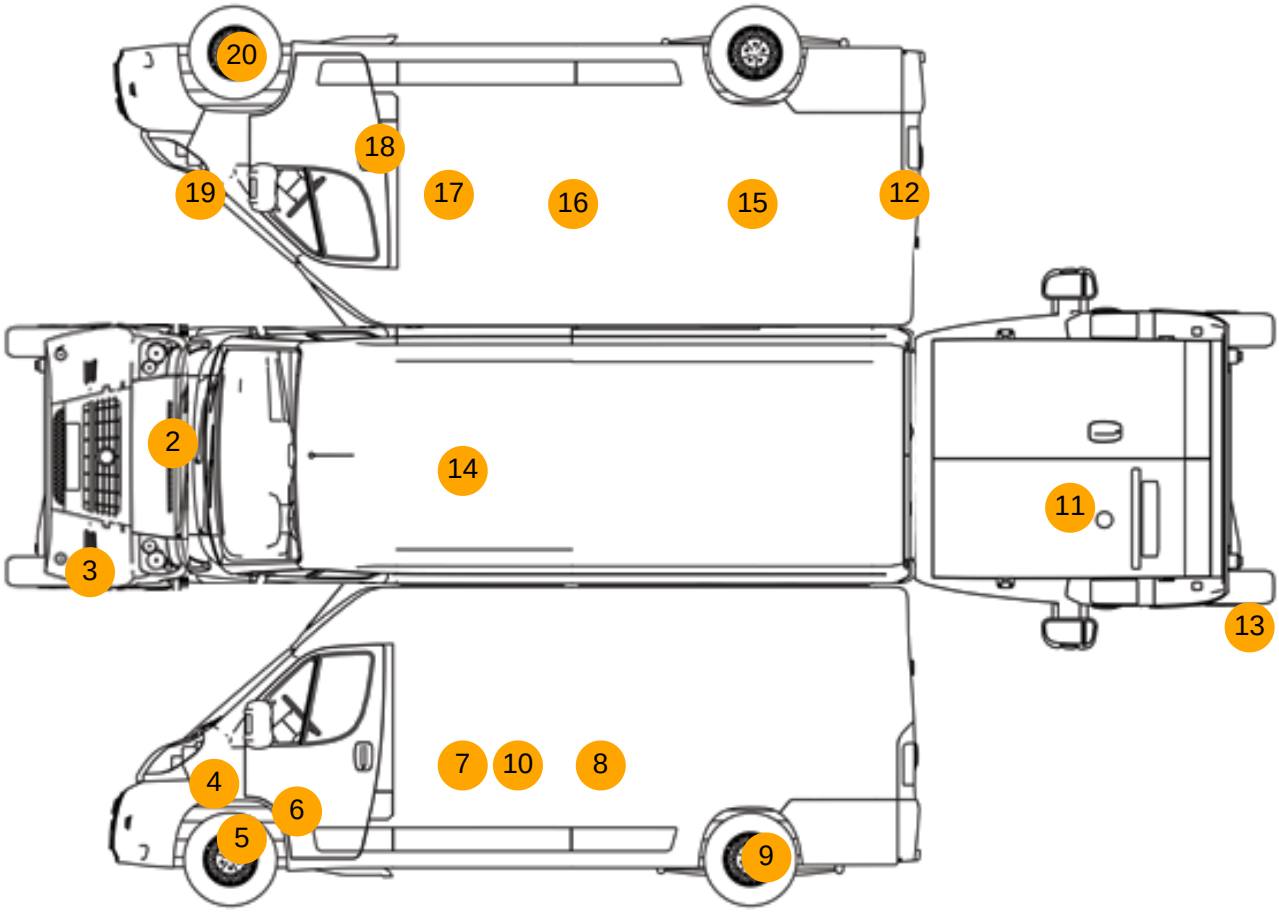

Damage Photos

1: Seat Back Cover osf
Scuffed
Over 25mm

2: Bonnet
Chipped
1 To 5

3: Bumper Front
Cracked
UpTo 25mm

4: Wing nsf
Poor Previous Repair
Poor Paint

5: Wheel nsf
Scratched
Over 50mm

6: Door nsf
Dented
With Paint Damage

7: Door nsr
Scratched
Over 25mm Thru Paint

8: Qtr Panel nsr
Chipped
Multiple Chips

9: Wheel nsr
Scratched
Up To 50mm

10: C Post ns
Chipped
1 To 5

11: Tailgate
Dented
Over 30mm

12: Qtr Panel osr
Rusted
Over 5mm

13: Bumper Rear
Scratched
25 to 100mm Thru Paint

14: Roof
Dented
Between 10mm + 30mm

15: Qtr Panel osr
Dented
Over 30mm

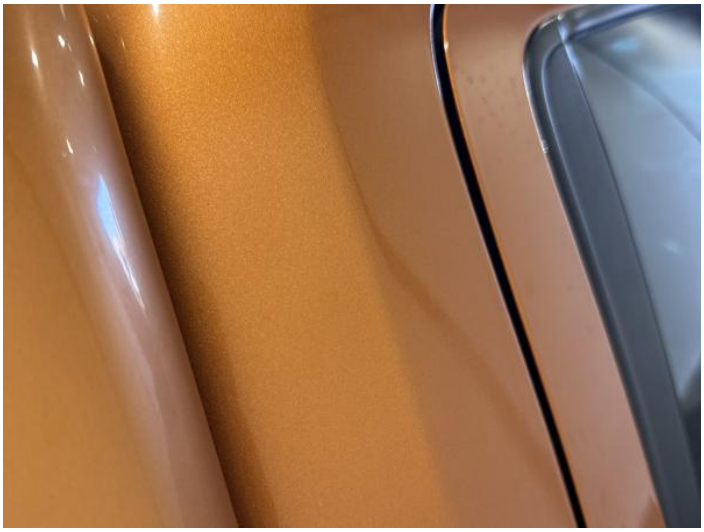

16: C Post os
Dented
Between 10mm + 30mm

17: Door osr
Chipped
1 To 5

18: Door osf
Dented
Between 10mm + 30mm

19: Wing osf
Chipped
1 To 5

20: Wheel osf
Scratched
Over 50mm

Interior

Carpet Condition	Average	**Upholstery Condition**	Average
Seat Condition	Average	**Odour**	No

Vehicle Inspection Report

Disclaimer

Photographs, inspection reports and other descriptions are primarily for the use of customers using our LiveBid facility who are not able to attend the sale in person. Those who bid in person must satisfy themselves as to the condition of the vehicle before they bid; we cannot address post-sale issues which rely solely on our reports, descriptions and/or photographs.

Additional fees may apply to some vendors.

Please note buyers rate increase from 01/01/2025

Engine Runs	OK	Gearbox 1st and Reverse Test	OK
Brakes	OK	Clutch Slip Test from Static	OK
Turbo Boosting	OK	Gearbox Static Gear Selection (engine running)	OK
Parking Brake	OK	No Excessive Smoking	OK
EML light illuminated	OK	Oil warning light illuminated	OK
Airbag light illuminated	OK	DPF light illuminated	OK
ABS light illuminated	OK	Service indicator light illuminated	OK
Windows	OK	Radio	OK
Sat nav	OK	Steering	OK